1 TRAILER LIFTING

LOG TRANSPORT SAFETY COUNCIL

1. Trailer Lifting Background

1.1 NEED FOR THESE GUIDELINES

The Health and Safety at Work Act 2015 requires every employer to take all practical steps to ensure the safety of employees at work. Employees must also take all practical steps to ensure their own safety and to ensure that they take no action or inaction while at work that causes harm to other persons. These guidelines are the result of an extensive review of lifting practice and provide guidance on what practical steps can to be taken to meet the requirements of the Health and Safety at Work Act 2015.

1.2 CHARACTERISTICS OF LIFTING INCIDENTS

Lifting incidents have typically been due to:

(A) **Mechanical failure of the chains and fittings**

(B) **Mechanical failure of the loader**

(C) **Incorrect use of the loader**

(D) **Loader too small or unsuitable for trailer lifting**

(E) **Drivers falling from the truck chassis**

(F) **Drivers being too close to moving machinery**

(G) **Chains slipping in the grapples or sliding over the forks**

(H) **Lack of communication between the driver and loader operator**

(I) **Wet, icy or muddy conditions making climbing on trucks difficult**

1.3 METHODS OF LIFTING TRAILERS

There are three basic lifting methods available:

(A) **Lifting using a hook**

(B) **Lifting by grabbing the chain or by placing forks under the chain**

(C) **Non-chain alternatives such as crossbeams that can be grabbed by the grapple or forklift pockets**

Each of these methods has its advantages and disadvantages. For example, while the use of lifting hooks on grapple loaders reduces the risk of mechanical failure, it does require drivers to work at heights in often difficult conditions. With careful management all three methods have their place.

2. Trailer Lifting Operations

1.2 RESPONSIBILITIES

The truck driver is the person with overall responsibility for the trailer lifting operation. Loader operators must follow the instructions of the driver and must ensure that they can clearly see the driver or be aware of where the driver is at all times. This does not negate the general requirement for duty of care and e ver yone on site, including the loader operator, must take all practical steps to avoid imminent harm. All communications must be clear and concise. To assist with this, a standard set of hand signs are included in this guide.

2.1 CLIMBING OR WORKING AT HEIGHTS

When climbing or working at heights, it is important to remember to have three points of contact at all times. Many of the incidents have been due to slipping and falling.

2.3 ROTATING DRAWBAR TURNTABLES

The front wheels of the trailer must be kept as close to the ground as practical whilst allowing the operator to maintain optimum control of the drawbar process when the drawbar is being repositioned. The operator must not move under any part of the suspended trailer to carry out this task. When the loader is moving the trailer forward into the tow coupling, the driver must be on the opposite side allowing the loader driver to view the connection.

2.4 GANTRY CRANES

Gantry cranes are preferred to other methods of lifting when they are available. Care needs to be taken to ensure that everyone is clear of the lifting operation and to take care when connecting or disconnecting the lifting hook.

2.5 GRAPPLE LOADERS

Grapple loaders can be used to lift trailers either by using hooks on the grapple or boom or by grasping the chain, provided cer tain precautions are taken. Bunching grapple loaders are not to be used as they are unsuitable for lifting heavy loads.

The loader must be stable before commencing the lift. This can require the use of fresh logs to form a stable platform. The grapple must not to be moved when the driver or any other p erson is in clo se prox imity to the grapple or a swinging load except, when coupling the trailer to the truck.

Where a trailer is fitted with a purpose-built lifting bar, the lifting bar must be used when lifting the trailer with a grapple loader.

The loader operator must ensure the trailer is appropriately balanced and remains stable throughout the lifting operation, taking care to prevent uncontrolled movement, tilting or swinging of the trailer.

If, during the operation, a potential release of stored energy is identified, the operation must cease and be reassessed to ensure the task can be carried out safely.

Pogo sticks or other methods of presenting the chain to the grapple should be used if provided.

2.6 RUBBER TYRE LOADERS

Care needs to be taken to ensure the load is well balanced so that the chains do not slide on the forks. If sliding occurs it can result in the trailer tipping or sliding off of the forks.

The grapple crowd must be in a closed position and the loader forks must not be moved when the driver or any other person is in close proximity to the forks or a swinging load except when coupling the trailer to the truck.

Pogo sticks or other forms of presenting the chain to the loader should be used if provided.

2.7 INSPECTION

Trailer lifting chain, anchor points and fittings must be inspected regularly and replaced if:

(A) **A link is visibly worn to 90% or less of its original diameter or is showing other visible evidence of the loss of strength**

(B) **There are any knots in the chain**

(C) **There is a spread or distorted fitting by 10% or more**

(D) **Any link or fitting is noticeably bent, twisted stretched or has collapsed**

(E) **Any weld, link, fitting or anchor point is cracked**

(F) **Any chain connectors are worn or damaged**

Only chains and fittings that are endorsed for lifting purposes may be used. For more information refer to the Approved Code of Practice for Load Lifting and Rigging.

2.8 TRAINING

Driver's must be trained or undergoing training in trailer lifting procedures.

1.2 TRAILER LIFTING





1 Driver ensures loader grabs trailer correctly and all chains are disconnected, signals OK and moves to safe area in view of loader operator before loader starts lifting.





2 Loader moves to a better position to lift the trailer and gain a better view of the truck driver as they come in to unhook the drawbar. Loader lifts trailer until the front axle is off the ground and the rear axle is touching the ground making the trailer stable. The drawbar should be as close to the ground as practicable while providing an appropriate ergonomic position for the operator.





3 Driver stops and makes visual contact with loader operator. When visual OK is given the loader starts to slowly slew the drawbar towards the ring feder. Loader driver moves drawbar toward ringfeder with the truck driver guiding the tow eye. Truck driver always faces the loader operator and holds drawbar back from tow eye.




4 Truck driver connects trailer attachments while loader operator parks with cab facing driver and grapple lowered. Truck driver and loader operator discuss final loading details including where to place the logs on the truck and trailer. Driver moves into the agreed safe zone which could be the cab.

3. Trailer Lifting Equipment, Operation, Construction and Repair

3.1 LIFTING EQUIPMENT

Only grapple loaders, gantries, rubber tyre loaders and other equipment that meets the requirements of Part 14 of the Approved Code of Practice for Cranes shall be used to lift trailers. Those requirements include the need for regular maintenance inspections.

Gantry cranes are recommended at mills and other fixed sites where trailer lifting is undertaken on a regular and on-going basis. The area around the gantry must be well lit and the road surface under the gantry in good condition and devoid of any tripping hazards. The gantry controls must be positioned for ease of use while ensuring the operator is clear during the lifting operation.

3.2 ALTERNATE METHODS OF LIFTING

Alternative methods of lifting, including the use of lift pockets on trailers and special purpose lifting frames may be used but must comply with the relevant OSH approved codes of practice.

3.3 TRAILER LIFTING CHAINS

Chains and fittings must be endorsed for lifting purposes in accordance with the Department of Labour OSH Approved Code of Practice for Load Lifting and Rigging. Transport chain is not suitable. The size of chain and fittings required can be assessed using the flow charts included in this section of the code.

The trailer lifting chain must be securely anchored and rigged such that the trailer is stable when suspended. Four-point attachment is preferred and is required for new trailers. The chain geometry, the length of the central section of chain and the position of the fitting can make a difference in the risk of the chain sliding on the forks of rubber tyre loaders.

Steps must be taken to minimise the need for drivers to be close to loader grapples or forks or to climb up on the back of trucks. These could include the provision of pogo sticks, chain tensioning systems or other lifting arrangements that present the chain ready for lifting.

3.4 MAINTENANCE OF LIFTING CHAINS AND FITTINGS

Trailer lifting chain, anchor points and fittings must be inspected regularly and replaced if:

(A) **A link is visibly worn to 90% or less of its original diameter or is showing other visible evidence of loss of strength**

(B) **There are any knots in the chain**

(C) **There is a spread or distorted fitting**

(D) **A link is weakened by gouges or pits reducing the diameter by 10% or more**

(E) **Any link or fitting is noticeably bent, twisted stretched or has collapsed**

(F) **Any weld, link, fitting or anchor point is cracked**

(G) **Any chain connectors are worn or damaged**

Chains and fittings must not be repaired by welding.

Consider using alternatives to standard chain connectors if fittings are repeatedly damaged.

3.5 TRAILER TURNTABLE

The trailer turntable must be easy to rotate in order to minimise the need for the driver to reach under trailer when turning the drawbar. A handle and other device fitted to the turntable is worth considering. Regular maintenance is important to ensure the turntable turns freely.

3.6 TRUCK ACCESS

The truck must be fitted with steps and non-slip surfaces if the driver is required to climb onto the back of a truck on a regular basis. Three point contact must be used, when climbing up and down from vehicles.

4. Trailer lifting – Technical background

The requirements for lifting chains and fittings have been calculated using the OSH Approved Code for Practice for Load-Lifting Rigging (2001). On many trailers there is four-leg section of chain nearest to the chain anchors and a central portion that is two-legged. An arrangement that has 13mm for the four-leg section and 16mm for the central two leg section is equivalent in capacity to a 16mm two-leg system over its entire length.

In the OSH Code of Practice lifting capacity is related to the angles of the chains. For reasons of simplicity, rather than measure angles, it is proposed that chain height divided by the distance between the front and rear anchors be used as shown in the following diagram.

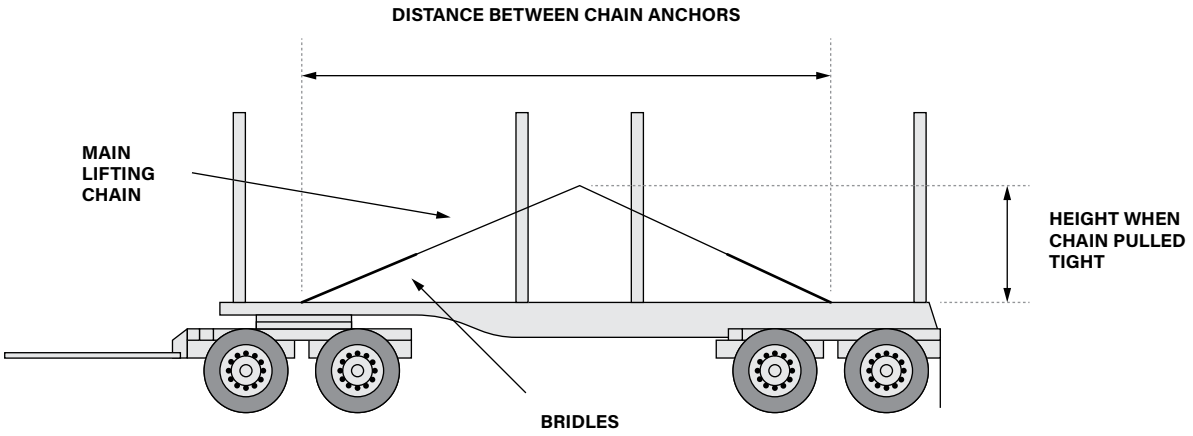

The following graph and table show the weight of the trailer that can be lifted with different chain sizes and loader type.

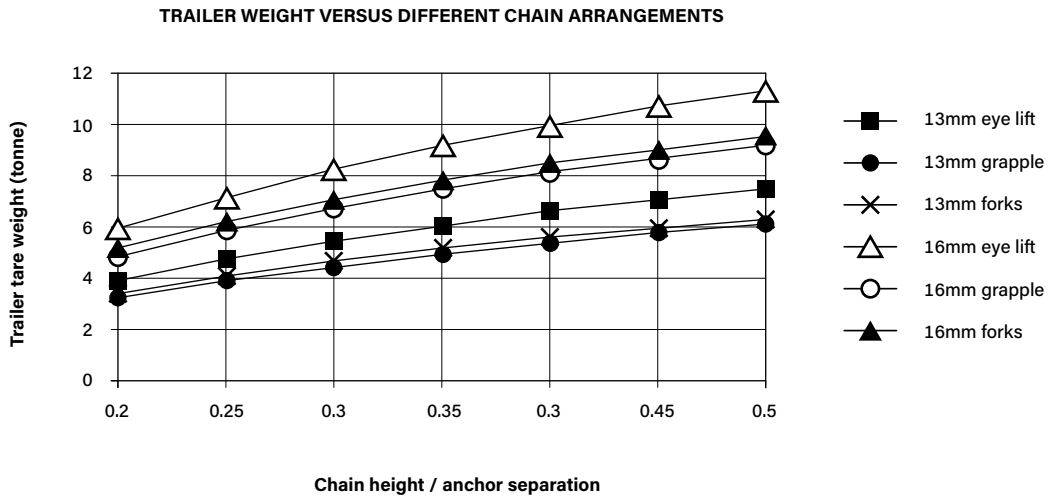

	13MM GRADE 80 CHAIN			16MM GRADE 80 CHAIN		
HEIGHT RATION	**EYE LIFT**	**GRAPPLE**	**FORKS**	**EYE LIFT**	**GRAPPLE**	**FORKS**
0.2	3.9	3.2	3.4	5.9	4.9	5.2
0.25	4.7	3.9	4.1	7.2	5.8	6.2
0.3	5.5	4.5	4.7	8.2	6.7	7.1
0.35	6.1	5.0	5.2	9.2	7.5	7.8
0.4	6.6	5.4	5.6	10.0	8.1	8.5
0.45	7.1	5.8	6.0	10.7	8.7	9.1
0.5	7.5	6.1	6.3	11.3	9.2	9.5
OSH Lifting Code >0.29 height ratio	5.3	4.3	4.6	8.0	6.5	6.9

The lowest lifting capacity is when grapple loaders are used. The OSH values shown in the table are those specified in Table 5 of the Load-Lifting Rigging Code for an included angle of 90 – 1200, which are the same as the values calculated for an angle of 1200.

For reference the typical tare weights of older trailers are:

3 axle multi bolster	5.0 tonne
3 axle single bunk	4.25 tonne
4 axle multi bolster	5.5 tonne

4 axle single bolster	4.75 tonne
5 axle single bolster	6.0 tonne

Some existing trailers fitted with 13mm chain do not meet these requirements when grapple loaders are used. There are three options available depending on the weight of the trailer:

Option 1: For each trailer calculate the height ratio and use the table to determine whether the height needs to be increased or a larger chain used.

Option 2: Use Grade 100 chain, which is approximately 1.25 times the strength of grade 80.

Option 3: Use 16mm chain for the central 2-leg portion of 4-leg arrangements and for the entire chain for 2-leg arrangements.

Concerns have been raised about the weight of 16mm chains for drivers when they have to lift them up onto hooks, pogo sticks etc. Replacing the central 3 metre section of chain to 16mm will add approximately 5.7 kg to the weight of the chain. If it is assumed that 5m of chain has to be lifted then with standard 13mm chain the weight is 19kg. With the 3 metre section of chain replaced by 16mm chain the weight is 24.7kg. The OSH Department of Labour Code of Practice for Manual Handling has a risk rating system on page 46. Manual lifting that involved lifting 20-29kg in weight, some bending forward or twisting, has restricted posture stability (floor uneven, soft. Slippery or sloping) and is undertaken less than 10 times per shift has a risk score of 7. With a score under 10, injuries are unlikely.

The above options are incorporated in the “Procedure for Assessing Trailer Lifting Chains” in the design section of this code.

5. LTSC Trailer Lifting Chain Check and Compliance Certificate

5.1 PURPOSE

The purpose of this Control Sheet is to assess each individual trailer lifting chain for conformance to the LTSC code, regardless of trailer manufacture as a minimum Code of Compliance to the industry standard. The assessment is of the chain, including the lifting ring and joining mechanisms only.

The chassis attachment points are presumed to be manufacturer designed, approved and tested but should be visually checked for damage, wear or cracking.

5.2 TOOLS REQUIRED

(A) Tape measure
(B) Measuring callipers
(C) Lifting device to extend and hold chain taut.

5.3 PROCESS

(A) Trailer Details

MAKE	
MODEL	
REGISTRATION NUMBER	
OWNER/OPERATOR	
FLEET NUMBER	
TARE WEIGHT	

NOTE: TARE Weight rounded up to nearest 100kg: i.e.: 6120kg = 6200kg for calculation purposes.

(B) SPECIFY CHAIN MAKE UP as provided by APPROVED SUPPLIER

	APPROVED SUPPLIER	GRADE G80 -G100	SIZE MM	WLL (WORK LOAD LIMIT) RATING (TONNE)
BRIDLE CHAINS				
BRIDLE CONNECTORS AT RING* ***(IF USED)***				
BRIDLE RING / LINK				
BRIDLE CONNECTORS AT CHASSIS				
MAIN LIFTING CHAIN				
MAIN LIFTING CHAIN - GRAPPLE REGION:				
MASTER LINK RING				
MAIN LIFTING CHAIN CONNECTOR				

NOTE: Any and all replacement equipment must be procured from an approved supplier.
NOTE: If chain marking is obscured chain is deemed to be Grade (G80)

(C) Visually inspect chains, particularly looking for worn or damaged links, connectors and lifting rings.

(D) Check several links for wear with calipers through the end of the link and in the middle of the link plus anywhere showing any signs of wear on contact.

NOTE: Wear is normally more prevalent close to the lifting ring 6 to 10 links each side but a full check of the whole chain is necessary.

(E) Any chain link, hammerlock, bridle link, joining device or lifting ring showing deformity or wear of 10% or more must be replaced BEFORE lifting the trailer again.

(F) Complete the Height Ratio Indicator Calculations and the Ring Lifting Limit.

$$\textbf{Height ratio: } = \frac{\textbf{Height when chain pulled tight}}{\textbf{Distance between chain anchors}}$$

Measure the height of the chain when pulled tight	**=**	**metres**
Measure the distance between the chain anchors (see diagram)	**=**	**metres**
Calculate the chain height ratio	**=**	

CHAIN	GRADE (G80 - G100)	DIA (13MM - 16M)	COMPLIES WITH LIFTING LIMITS (✔)
BRIDLES (IF USED)			
MAIN LIFTING CHAIN			

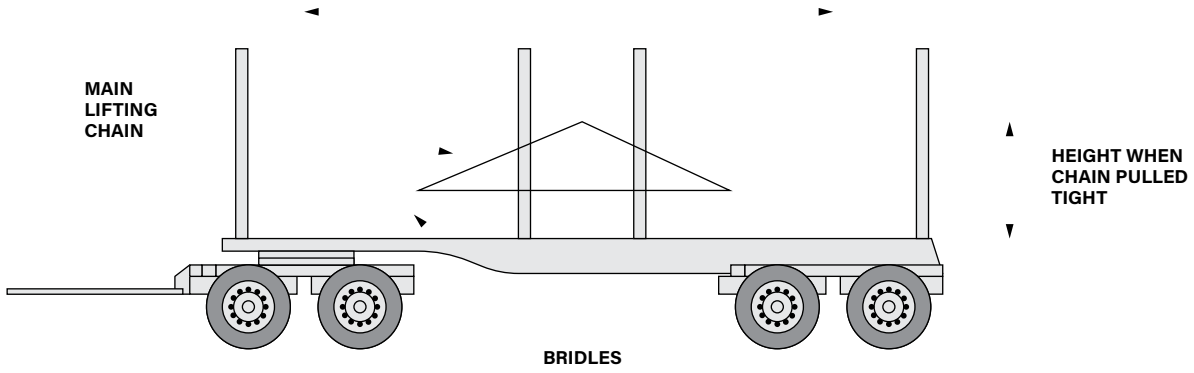

Write down the lifting weight from the table using the calculated chain height ratio.
Follow the flow chart:

Ring lifting limit	**=**	**tonne** (from tables on page 3)
Grapple Lifting Limit *	**=**	**tonne** (from tables on page 3)
Fork Lifting Limit *	**=**	**tonne** (from tables on page 3)

*Based on the section of chain coming into contact with the grapple or forks.

All lifting limits for forseeable usage exceed rounded-up trailer tare **Yes/No**
NOTE: REFER TO LTSC GUIDELINES IF NOT COMPLIANT

HEIGHT RATIO	13MM GRADE 80 CHAIN		
	RING LIFT	GRAPPLE	FORKS
0.22	4.27	3.49	3.69
0.23	4.43	3.62	3.83
0.24	4.59	3.75	3.96
0.25	4.73	3.88	4.09
0.26	4.89	3.99	4.22
0.27	5.04	4.11	4.33
0.28	5.18	4.23	4.45
0.29	5.39	4.34	4.57
0.30	5.45	4.45	4.68
0.31	5.58	4.56	4.79
0.32	5.71	4.66	4.90
0.33	5.84	4.76	5.00
0.34	5.96	4.86	5.09
0.35	6.08	4.95	5.19
0.36	6.19	5.05	5.28
0.37	6.30	5.13	5.37
0.38	6.42	5.22	5.46
0.39	6.52	5.31	5.55
0.40	6.62	5.39	5.62

HEIGHT RATIO	13MM GRADE 100 CHAIN		
	RING LIFT	GRAPPLE	FORKS
0.22	5.40	4.41	4.67
0.23	5.60	4.58	4.84
0.24	5.80	4.74	5.01
0.25	5.99	4.90	5.17
0.26	6.18	5.05	5.33
0.27	6.37	5.20	5.48
0.28	6.55	5.35	5.63
0.29	6.72	5.49	5.78
0.30	6.89	5.63	5.92
0.31	7.06	5.76	6.06
0.32	7.22	5.89	6.19
0.33	7.38	6.02	6.32
0.34	7.53	6.14	6.44
0.35	7.68	6.26	6.56
0.36	7.83	6.38	6.68
0.37	7.97	6.49	6.79
0.38	8.11	6.60	6.90
0.39	8.24	6.71	7.01
0.40	8.37	6.81	7.11

HEIGHT RATIO	16MM GRADE 80 CHAIN		
	RING LIFT	GRAPPLE	FORKS
0.22	6.45	5.26	5.58
0.23	6.69	5.47	5.78
0.24	6.93	5.66	5.98
0.25	7.15	5.85	6.17
0.26	7.38	6.03	6.36
0.27	7.61	6.21	6.54
0.28	7.82	6.39	6.72
0.29	8.02	6.56	6.90
0.30		6.72	7.07
0.31		6.88	7.24
0.32		7.03	7.39
0.33		7.19	7.55
0.34		7.33	7.69
0.35		7.47	7.83
0.36		7.62	7.98
0.37		7.75	8.11
0.38		7.88	
0.39		8.01	
0.40			

HEIGHT RATIO	16MM GRADE 100 CHAIN		
	RING LIFT	GRAPPLE	FORKS
0.22	8.06	6.58	6.97
0.23		6.84	7.22
0.24		7.07	7.48
0.25		7.31	7.72
0.26		7.54	7.96
0.27		7.76	8.18
0.28		7.99	
0.29			
0.30			
0.31			
0.32			
0.33			
0.34			
0.35			
0.36			
0.37			
0.38			
0.39			
0.40			

5.4 CHAIN SLING CONFIGURATION

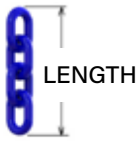

All components to be identified and confirmed

CHAIN

MAIN LIFTING CHAINS FRONT			
SIZE	GRADE	LENGTH	LINKS

GRAPPLE CHAIN REAR			
SIZE	GRADE	LENGTH	LINKS

BRIDLE CHAINS REAR			
SIZE	GRADE	LENGTH	LINKS

BRIDLE CHAINS FRONT			
SIZE	GRADE	LENGTH	LINKS

GRAPPLE CHAIN FRONT			
SIZE	GRADE	LENGTH	LINKS

MAIN LIFTING CHAIN REAR			
SIZE	GRADE	LENGTH	LINKS

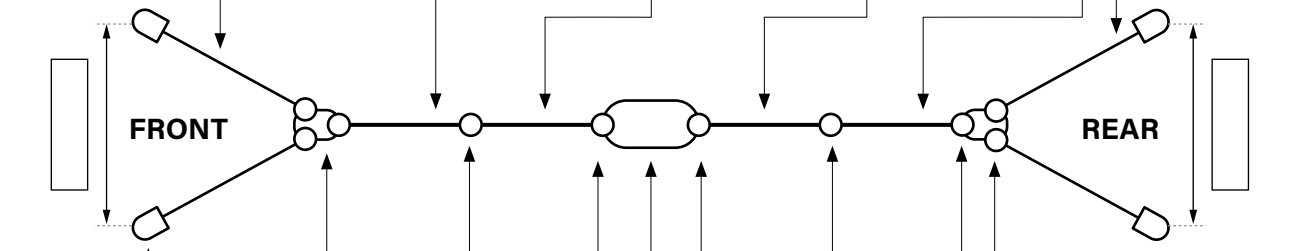

BRIDLE RING / LINK			
SIZE	GRADE	LENGTH	LINKS

MASTER LINK RING			
SIZE	GRADE	LENGTH	LINKS

BRIDLE RING UPPER CONNECTOR			
SIZE	GRADE	LENGTH	LINKS

CHASSIS CONNECTOR			
SIZE	GRADE	LENGTH	LINKS

MASTER LINK RINK CONNECTOR			
SIZE	GRADE	LENGTH	LINKS

BRIDLE RING LOWER CONNECTOR			
SIZE	GRADE	LENGTH	LINKS

CONNECTIONS

MAIN LIFTING CONNECTOR			
SIZE	GRADE	LENGTH	LINKS

(A) Complete the inspection date and set next inspection date – Maximum 13 Months.

(B) Signature and date required on completion by competent person.

NOTE: Competent Person Definition: A person with knowledge of truck servicing and measurement tools such as a mechanic, transport manager, experienced vehicle inspector, trained service manager, engineer or manufacturers representative. If in doubt contact your trailer manufacture.

5.5 INSPECTION DATE AND COMMENTS

I confirm I am competent to complete this inspection, and that the above information is true and correct at the date below

Signature: _____ Date: _____ Name: _____

Comments: _____

_____

_____

I, _____

Of _____

(Insert Name, Transport Company, Company address, Occupation)

Solemnly and sincerely declare that the following trailers meet the current Log Transport Safety Council Trailer lifting code.

_____

_____

_____

_____

And I make this solemn declaration conscientiously believing the same to be true and by virtue of the Oaths and Declarations Act 1957.

Signature of Declarant: _____

Declared at: _____, this _____ day of _____ 20

(PLACE) (DATE) (MONTH)

Before me: _____

(Justice of the Peace, Solicitor, Registrar or other person authorized to take a statutory declaration)

_____





1 Lift trailer using lifting chain, only lift trailer high enough to spin draw bar. The front wheels of the trailer must be kept as close to the ground as possible. All practical steps should be taken to avoid being under the trailer, especially the head and torso.



2 It is recommended to stand at the rear of the trailer, controlling the lift.



3 Reverse truck under trailer and lower trailer onto truck.



4 Secure trailer tie down chains securing trailer on truck.

6. Trailer Lifting Wheel Loader



1 Clear any debris from the unit, set up truck and trailer for piggy backing.



2 On the opposite side from the loader lift the chains onto the forks or use pogo stick if available.



3 On the opposite side from the loader disconnect trailer from truck.



4 Turn draw bar keeping the trailer as close to the ground as practical whilst allowing the operator to maintain optimum control of the draw bar while re-positoning.



5 Complete re-positoning locking drawbar under trailer. The driver should not be under the trailer at anytime while it is suspended above ground.



6 Once driver is clear the loader can lift the trailer.



7 Reverse truck under trailer and lower trailer onto truck.



8 Position trailer on truck.



9 Secure trailer tie down chains securing trailer on truck.